7$%/(2) &217(176

,QWURGXFWLRQ
)XQFWLRQDO 7RODUDQFLQJ $QQRWDWLRQ
3XOO GRZQ 0HQXV
,QVHUW
)XQFWLRQDO 7RROEDUV :RUNEHQFK
%RWWRP 7RROEDU
7RS 7RROEDUV
*' 7 5HYLHZ
*HRPHWULF &KDUDFWHULVWLF 6\PERO
0RGLI\LQJ 6\PEROV
2WKHU 6\PEROV

9LHZV
9LHZ &UHDWLRQ
2IIVHW 6HFWLRQ &XW
$OLJQHG 6HFWLRQ 9LHZ 6HFWLRQ &XW
2ULHQWDWLRQ
7UDQVIHU
8VLQJ $[LV 6\VWHPV
3URSHUWLHV
&KDQJLQJ 6XSSRUW

'DWXPV
3ODQDU 'DWXPV
7ROHUDQFLQJ $GYLVRU
'DWXP 5HIHUHQFH)UDPHV
0DQXDOO\
3RVLWLQJ D 'DWXP
'DWXP 7DUJHWV
3RLQWV
7ROHUDQFLQJ $GYLVRU
0DQXDOO\
/LQHV
7ROHUDQFLQJ $GYLVRU
0DQXDOO\
$UHDV
7ROHUDQFLQJ $GYLVRU
0DQXDOO\
'DWXP $[HV DQG &HQWHU 3ODQHV
7ROHUDQFLQJ $GYLVRU
0DQXDOO\

' L P H Q V L R Q V
& U H D W L Q J ' L P H Q V L R Q V
/ H Q J W K ' L V W D Q F H
$ Q J O H
5 D G L X V
' L D P H W H U

2 U L H Q W D W L R Q &R Q W U R O V
3 H U S H Q G L F X O D U L W \
7 R O H U D Q F L Q J $ G Y L V R U
0 D Q X D O O \
$ Q J X O D U L W \
7 R O H U D Q F L Q J $ G Y L V R U
0 D Q X D O O \
3 D U D O O H O L V P
7 R O H U D Q F L Q J $ G Y L V R U
0 D Q X D O O \
/ R F D W L R Q &R Q W U R O V
3 R V L W L R Q
7 R O H U D Q F L Q J $ G Y L V R U
0 D Q X D O O \
& R Q F H Q W U L F L W \
7 R O H U D Q F L Q J $ G Y L V R U
0 D Q X D O O \
6 \ P P H W U \
7 R O H U D Q F L Q J $ G Y L V R U
0 D Q X D O O \
5 X Q R X W &R Q W U R O V
&L U F X O D U 5 X Q R X W
7 R O H U D Q F L Q J $ G Y L V R U
0 D Q X D O O \
7 R W D O 5 X Q R X W
7 R O H U D Q F L Q J $ G Y L V R U

$QQRWDWLRQV
&UHDWLQJ 7H[W
0RGLI\LQJ 7H[W
7H[W 3URSHUWLHV 7RROEDU
)RQW SURSHUWLHV
-XVWLILFDWLRQ
$QFKRU SRLQW
)UDPH
,QVHUW 6\PERO
3URSHUWLHV
$GGLQJ D /HDGHU
/LQNV
2ULHQWDWLRQ /LQN
3RVLWLRQDO /LQN
$WWULEXWH /LQN
4XHU\ 2EMHFW /LQNV
,VRODWH 7H[W
)ODJ 1RWHV
5RXJKQHVV 6\PERO
:HOG 6\PERO
*UDSKLF 3URSHUWLHV 7RROEDU
&RS\ 2EMHFW)RUPDW
7RODHUDQFLQJ $GYLVRU
7H[W
)ODJ QRWHV
5RXJKQHVV 6\PERO

*HRPHWU\ IRU '
5HVWULFWHG $UHD
&RQVWUXFWLRQ *HRPHWU\ &UHDWLRQ
&RQVWUXFWLRQ *HRPHWU\ 0RGLILFDWLRQ
7KUHDG 6SHFLILFDWLRQ &UHDWLRQ
*HRPHWU\&RQQHFWLRQ DJHPHQW

1RWH 2EMHFW $WWULEXWH

5HSRUWV

9LVXDOL]DWLRQ
/LVW $QQRWDWLRQ 6HW
' $QQRWDWLRQ 4XHU\
)LOWHULQJ
0LUURU
&OLSSLQJ 3ODQH
&DSWXUHV
'LVSOD\LQJ &DSWXUHV
&UHDWLQJ &DSWXUHV
)LOWHU :RUNEHQFK
$FWLYH 9LHZV DQG WKH &OLSSLQJ 3ODQH
&XUUHQW 6WDWH
&UHDWLQJ WKH 6LGH &DSWXUH
&UHDWLQJ WKH 7RS &DSWXUH
&UHDWLQJ WKH ' $OO &DSWXUH
&UHDWLQJ WKH ' 1RQH &DSWXUH
3URSHUWLHV
&DSWXUH 0DQDJHPHQW

3UREOHPV
3UREOHP
3UREOHP
3UREOHP
3UREOHP

$SSHQGL[$
0HFKDQLFDO 'HVLJQ)7 $ 7RROHUDQFL
0HFKDQLFDO 'HVLJQ)7 $ 'LVSOD\
0HFKDQLFDO 'HVLJQ)7 $ &RQVWUXFW
0HFKDQLFDO 'HVLJQ)7 $ 0DQLSXODW
0HFKDQLFDO 'HVLJQ)7 $ 'LPHQVLR
0HFKDQLFDO 'HVLJQ)7 $ $QQRWDWLRQ
0HFKDQLFDO 'HVLJQ)7 $ 7RROHUDQFH
0HFKDQLFDO 'HVLJQ)7 $ $GPLQLVWU

)XQFWLRQDO 7ROHUDQFLQJ DQG $QQRWDWLRQ

)XQFWLRQDO DQG DQQRWDWLRQ LQ D ' HQYLURQPHQW %\ WRRO [illegible] EH FUHDWHG 0DQ\ [illegible] HQYLURQPHQW [illegible] RQH VHW RI WRRO [illegible]

7R HIIHFWLYHO\ LP [illegible] IXQGDPHQWDO [illegible] WKLV FRXUVH WR [illegible] WKH ZRUNEHQFK [illegible]

7ROHUDQFLQJ $GYLVRU

Select the 7ROHUDQFLQJ $GYLVRU **icon, then select the top of the part.** <RX ZLOO FUHDWH D IODWQHVV WROHUDQFH IRU WKLV IDFH

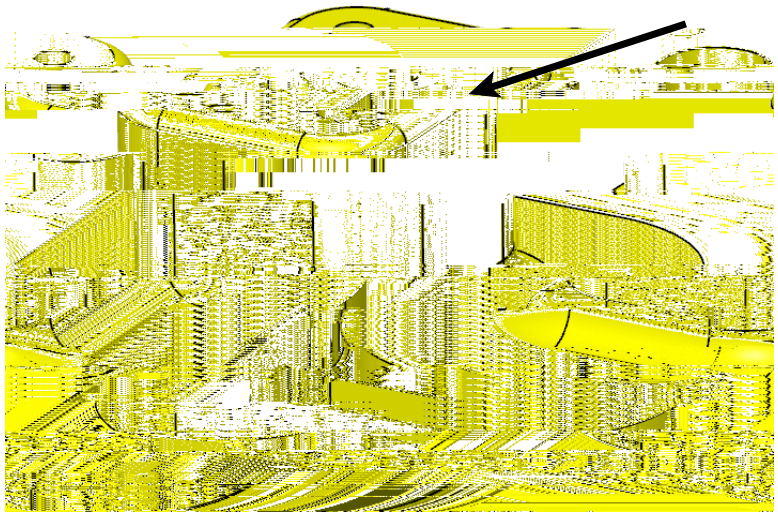

<RXU ZLQGRZ VKRXOG DSSHDU DOHUDQRZHQJ $GXLVRU WKHLRSWLR DUH QRW YDOLGDFRU 2QOL\QWKH VXUOOLQHQGLVRSXWLVRHQ H[HUFLVH

Select the *Unit Basis* tab.

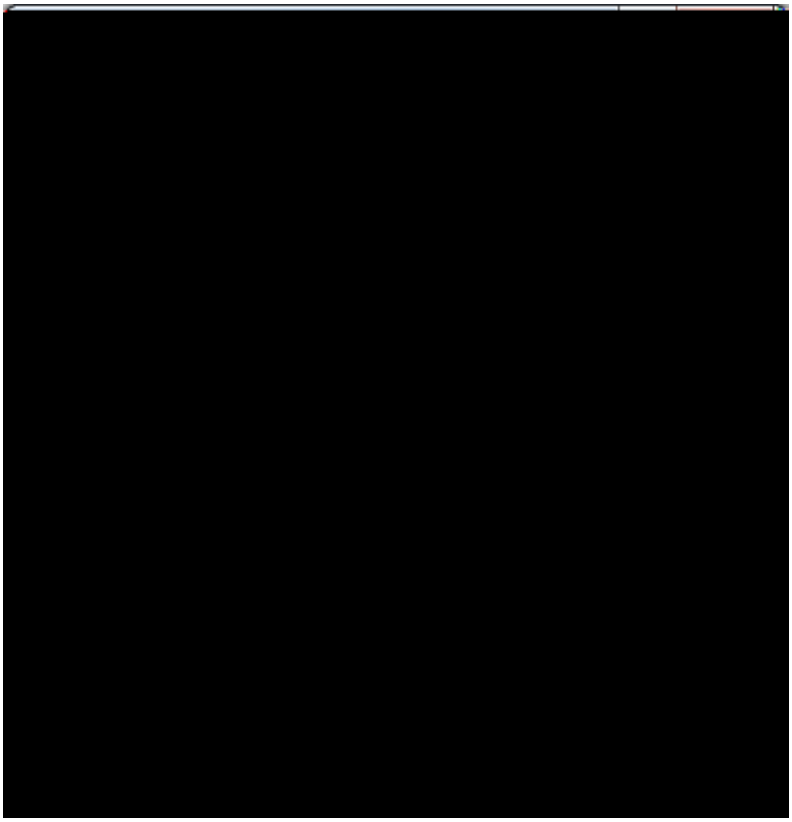

+HUH \RX FDQ VSHFLIIRO HUHDIQQHPRIQWDKVPVDXOOHHDDHRQJ
WRWDO YDULDWLRQ RU \RX FDQ XVH LW

Change the symbol to) O D W Q H V V **with a value of 0.03.** % H I R U H O K V H O R R N L Q W
W K H W R O H U D Q F H D U H Q D W K , H W J K U D V Q H E H G Q H V T W K J L O \ O / L R R N L Q W
V S H F L I L F D W L R Q , W U H U H G Z H H O T W R D V Q D V W H D G R I D
Geometrical Tolerance Flatness

6WUDLJKWQHVV

6WUDLJKWQHVV WRSOHUDQFHV VXUIDFKH HDQLVP HRQWFVHRQWHU IHDWXUHV RI VL]H

,I DSSOLHG WR DRVXUKDFZHVWWDFWRW WKHLQXUHDFHPHQXVW WR PHHW WKH GHVLJQO UHLTXLUHHPHQWVWDYHRIWWKHI[VXWIZLW WROHUDQFH]RQH SVDUHFOLWHG OHQWEVEDWWDWH WROHUDQFH Y

,I DSSOLHG WR DQQDH[LVRI RUFFHRQWHULHFDOWHFDRQXUHROV WK RI WKH D[LV 7KHWDZ[LWKPLXQVWKH[LFLRLHGUDEQFDHF]\RQQHGVHUZ GLDPHWHU KHWRXDHUDWRFW YDOXH

,I DSSOLHG WR D FHQWHU SODQDHFHLW(YHUF\RQLWUHRHOHGHV SODQH PXVW H[LHWDZLWK]LQHWKSHDFRQHG SODQHRVSHDUDV E\ WKH WROHUDQFH YDOXH

Open the 6WUDLJKWQHVV7ZR YLHZV DQG WZR GLPHQVLRQV D **document.**

7ROHUDQFLQJ $GYLVRU

$V VWDWHG EHIRUH $GYLVRU7RQHUXDQFLQJ$GYLVRU DOYDWROH FUHDWHG

Select the 7ROHUDQFLQJ $GYLVRU **icon, then select the cylindrical surface indicated below.** <RX ZLOO FUHDWRHDUVQHLJKWQKLQVRWXUIDHFHWX VL]H VR WKH WRSOHUDQFHZLOOHKHQXHUDHFHQWRWRWR LV FHQWHUOLQH

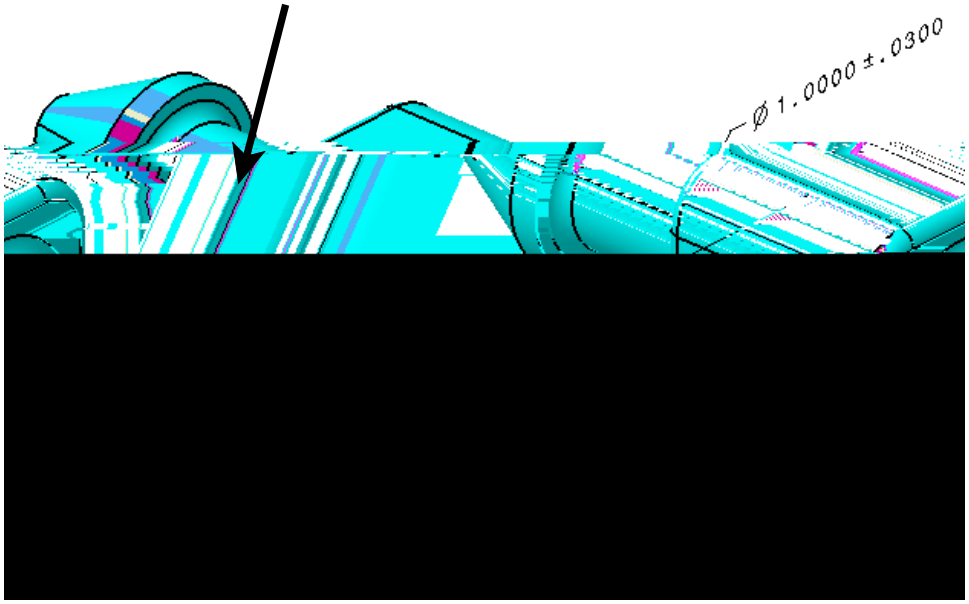

7 KSH Semantic Tolerancing Advisor Z L Q G R Z H [S D Q G R Q D Q G K D W H Z R S W L Q R W Y D
W K H F X U U H Q W H V E H O H Q W L R Q H K D G D Z D \

6 H O H F W W D K H J K W Q H V V 6 S H F L I L F K W L R Q Geometrical Specification
Z L Q G R Z D S S H D U V

& K D Q J H Numerical Y D O X H W R O K D Q G H V W R H F W U D Q F H D S S H D U V D Q
7 R O H U D Q F L Q J $ G Y L V R U U H P D L Q V D F W L Y H

Select *Close*, then position the tolerance as shown below.

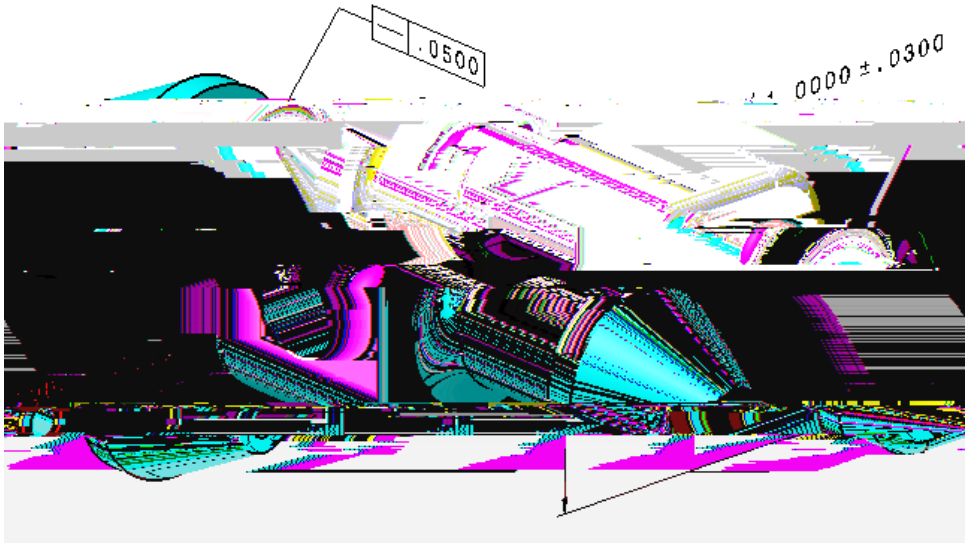

Select the tolerance, then press and hold the first mouse button on the yellow diamond.

Change the *Numerical* value to 0.05. 7KH GLDPHWHU WLFEROO\DXWRPDUV LQ IHDWXUH FRQWUR$ NQRZV WKDFW LWV&7,VOHUDQFH GLDPHWHU $OV PDWHULDO FRQGLWLRQZLFYDLODEOH

[redacted]

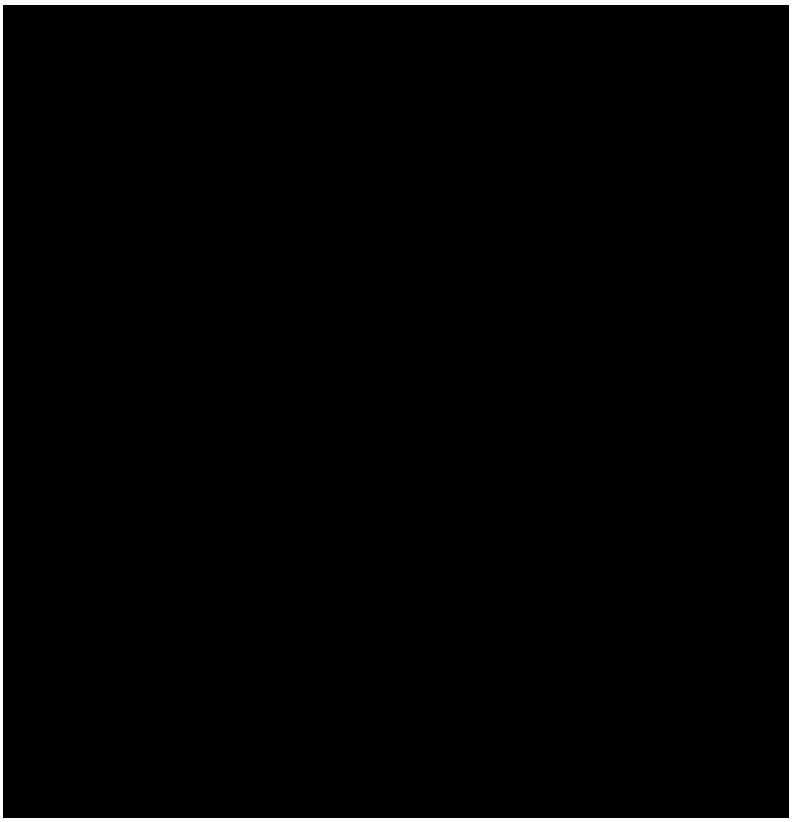

Select the 0D[LPXP 0DWHULDO **icon&** GLWKLRQDOORZV IRU H[WUD WR ZKLOH VWLOOXHQFWXULQJ RIWDKVHPEO\

Select *OK*, then select *Close*. 7KH VWUDLJKWSQHVDUW FEOHQUHDQFH WKH GLPH WROHUDQFH DQGLKDN WRSLWLW:LRRQYHVH WKHWRORQ DQFH Z PRYH ZLWK LW 7KHUDQFHLDKWRPHH[LWWZ DLQ WKHHGLDPHQVLR

[redacted]

Select in the *Definition Element* field and select the edge shown below.

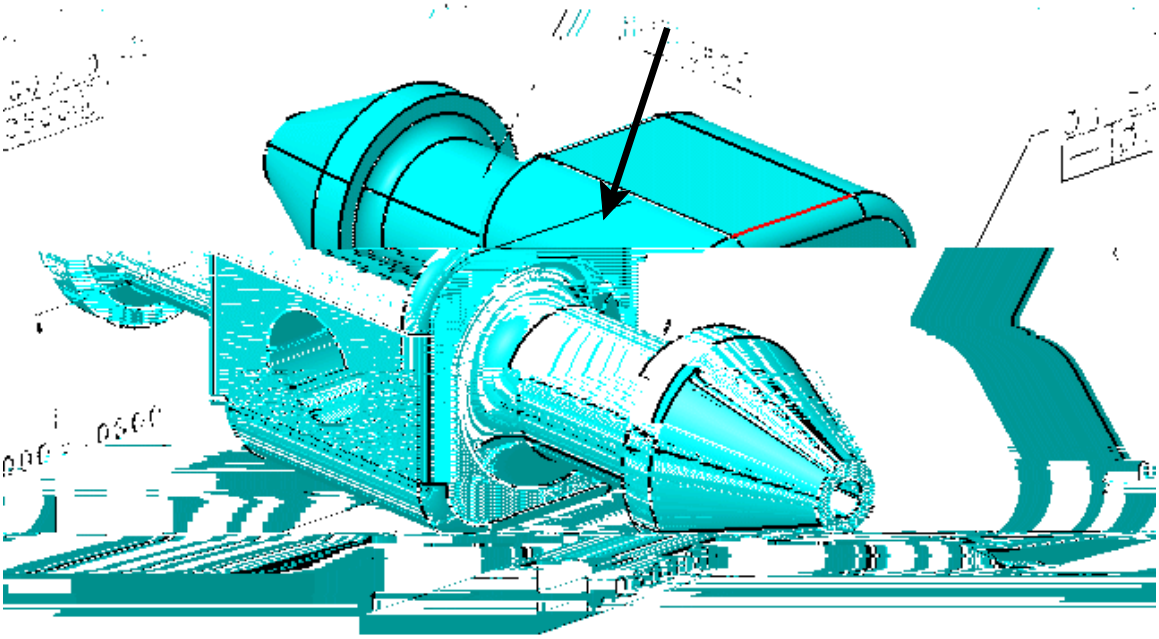

Select *OK*. 1 R U P D O O \ W K H W R E D W E Q F L W K E H G L P H Q V L R Q

Position the tolerance so that it is beneath the dimension.

Select the tolerance, then press the third mouse button on the yellow diamond at the end of the leader and select *Remove Leader/Extremity* from the contextual menu. 7 K H O H D G H U L V U H P R Y H G

Change the dimension's leader to 7 Z R 3 D W W H U Q **, then move the dimension below its bottom extension line.** 7 K H W R O H U D Q F H I R O O R Z V

$ V W U D L J K W Q H V V W R O H U D Q F H F D Q D

Open the 6WUDLJKWQHVV **document.** 8QLW<%RDVZLVOO GHILQH VRPH VWUDL WROHUDQFHV WZLWK XQLWQHEDWKHPWROHUDQFHV

Select the 7ROHUDQFLQ **icon.** $ (LVRSK Semantic Tolerancing Advisor ZLQGRZ DSSHDUV

Select the top face of the part, then choose the 6WUDLJKWQHVV **icon.** 6SH ILFDWLRQ 7KH Geometrical Specification ZLQGRZ DSSHDUV RP$DYLLHZDOOV FUXHDWHG V WKHUH ZHUH QRQH EHIRUHKDQG

Change the *Numerical* value to 0.05 and select the *Unit Basis* tab. 7KH RSWLRQV KHUH D YHU\ VLPLODUQHVRVWRSWLRQV H[FHSHWOHQJWKWKHUHQLWLRQO

[redacted]

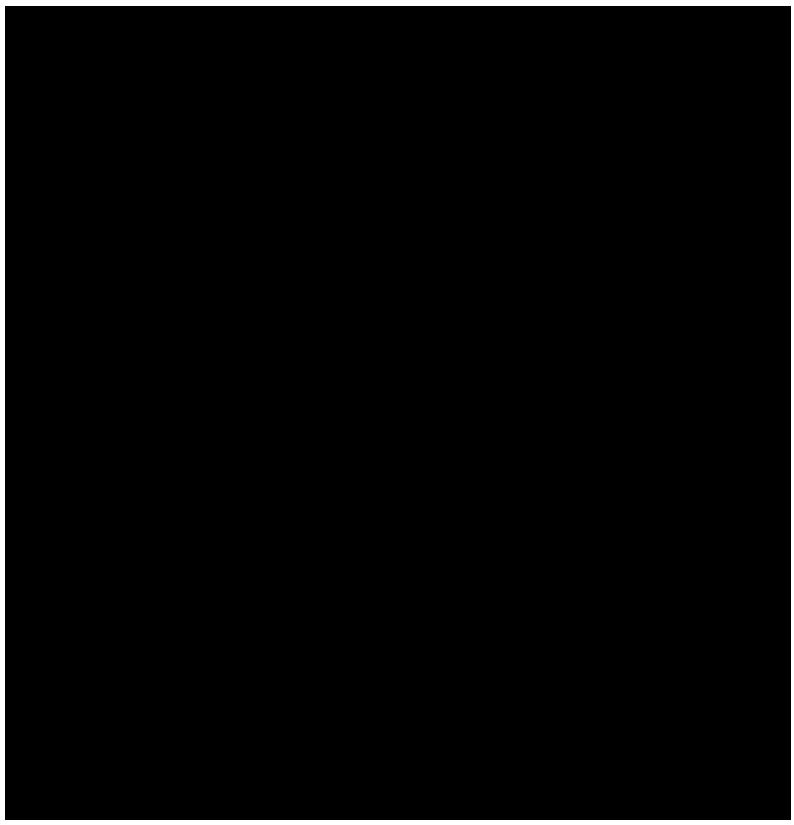

7KH Unit Basis WDE VSHFLILHV DQHILQHPHQWDWRSDHQDHQJWKRJI W ZLWK D WRWDOQYDHLXWLRQ\ RDWHWOIRX ,ZLWKLVSHFLI\ D UHII VWDWLQJ WKDWKIRUPD[LPXPHQJWKWLRQ FDQ RQO\

Select the *Applied on Unit Basis* and *Refinement Tolerance* options, change the *Numerical value* of the refinement to 0.02 and *Length 1* to 0.75, then select *OK*. $ VPDOO PHVVDJH DSSHDUVWLQRWQHUORZHUKHLWKLV$WZKQGRZPH PHV EHIRUH

> No definition element has been selected.
> Hence, the created geometrical tolerance applies to all the lines defined by all the possible intersection planes. This is not explicitly allowed by GD&T standards. Make sure it is really the specification you want to define.

Select *Close*, then double-click on the tolerance just created. :KHQ XVLQJ D SODQH WROHUDQFHUGWKHFWWLRQLJKWQHVV PXVW EH VSHFLILHG

Under the *General* tab, select in the *Definition Element* field and choose the line indicated below, then select *OK* and position the tolerance as shown here.

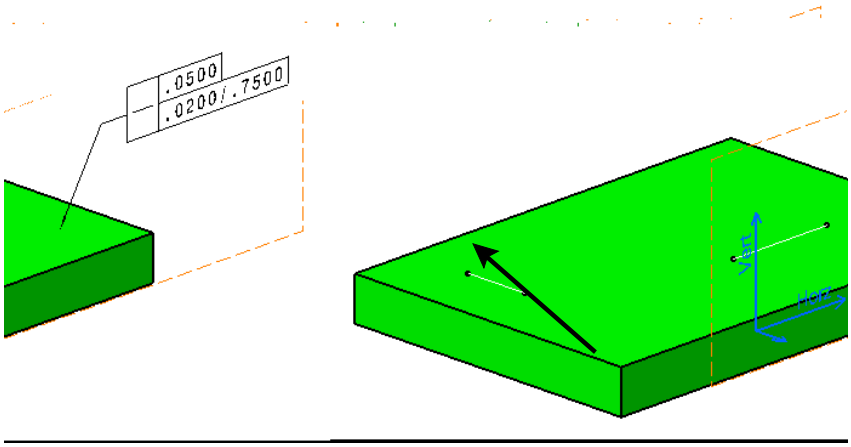

Create a view normal to the existing view, then create another straightness tolerance as shown below using the other line as the direction.

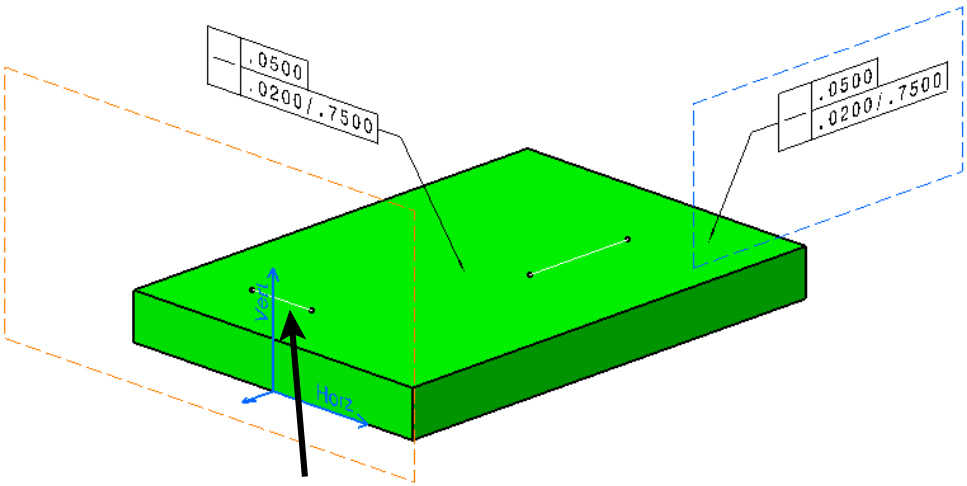

Save and close the document.

0DQXDOO\

1RZ \RX ZLOO PDQXDOO\ FRPHWULFDO WROHUDQFHV

Open the original 6WUDLJKWQHVV **document again, then select the** *HRPHWULFDO 7ROHUDQF **icon.** 1RWKLQJ ZLOO KDSSHQ XQWLOO DHFWHG

Select the cylindrical surface shown below. 7KH Geometrical Tolerance ZLQGRZ DSSHDUV

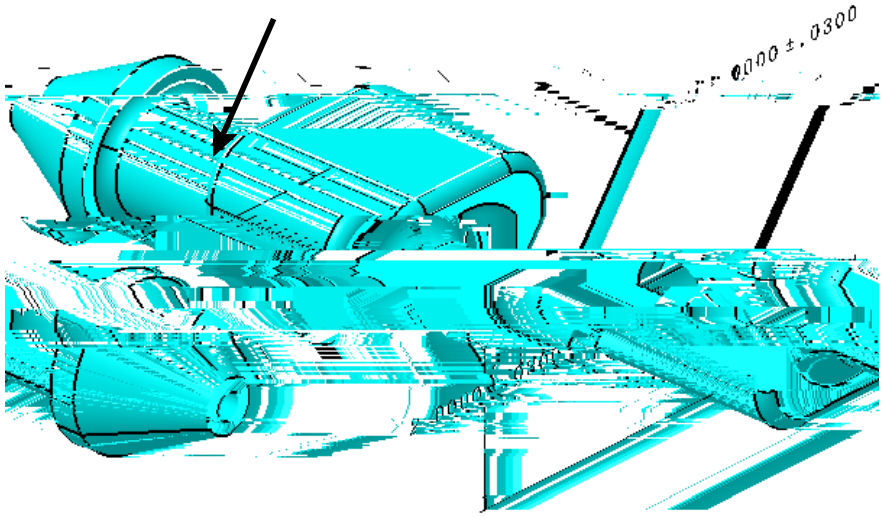

Change the specification to 6WUDLJKWQHVV **, then enter 0.05 for the *Tolerance* and click *OK*.** 7KLV WROHUDQFH LV GZHQWLHWH 7RQJ $GYLVRU

Select the *HRPHWULFDO 7ROHUDQF **icon, then select the conical surface shown below.** 7KH Geometrical Tolerance ZLQGRZ DSSHDUV

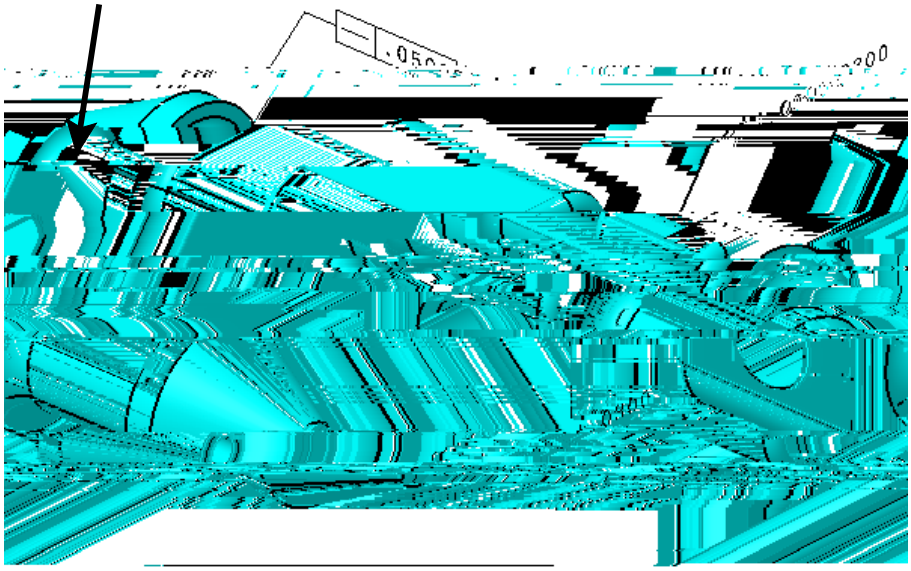

Change the symbol to 6WUDLJKWQHVV **with a value of 0.03 and select *OK*.** **The tolerance appears.**

Select the *HRPHWULFDO 7RODUDQFH **icon, then select the 1.0000 dimension.** 7KH Geometrical Tolerance ZLQGRZ DSSHDUV

Change the symbol to 6WUDLJKWQHVV 7KLV WLPH D GLDPHWHU V\PE ZLWK WKH YDOXH VLQFH &$7,$ ZLOO 7RO HUDQFH WQJ $NHY LW

Select before the value in the *Edit Tolerance* field, then select the symbol drop down as shown below. $ PHQX ZLWK YDULRXV V\PEROV DSSHDUV

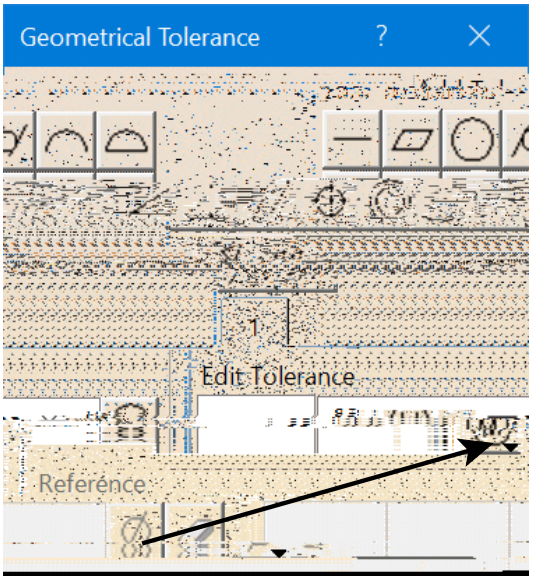

Select the 'LDPHWHU **symbol.** 7KH GLDPHWHU V\PEROV LQ HV\PEROV EHVRUH WKH

Change the value to 0.05, then select the symbol drop down again and choose the 0D[LPXP 0DWHULDO &RQ LWLRQ V\PEROV LQ HV\PEROV DLQWHU WKH YD **symbol.**

Select *OK*. 7KH WROHUDQFH DSSHDUV DPHWHU SRVLWLRQ HQ W 7KH *HRPHWULFDO 7RO HUDQFH WQJ [WQHVV WR EH GHILQHG $V EDQHVV WH SRVLWLRQHG

Select the *HRPHWULFDO 7RODUDQFH **icon, then select the 2.0000 dimension.** 7KH Geometrical Tolerance ZLQGRZ DSSHDUV

Change the symbol to 6 W U D L J K W Q H V V **with a value of 0.03.**

Add the 0 D [L P X P 0 D W H U L D O & R Q G L W L R Q **symbol after the value in the *Tolerance* field and select *OK*.** 7 K H W R O H U D Q F H D S S H D U V

Change the leader of the 2.000 dimension to 7 Z R 3 D U W V **, then position the tolerance beneath it as shown here.**

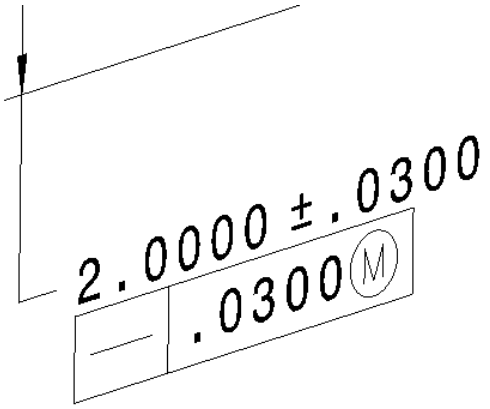

7 K H U H D U H D F R X S O H W H R I K W L V W H D W L D W R O H U D Q F H Z D V X Q D E
G H I L Q H G D Q G V W H Q L J K W S O D Q H D G W R O H U D Q F H X L U H F W L R

Close the document.

Open the 6WUDLJKWQHVV **document.** 8QLW<%RDVZLVOO PDQXDOO\ FUHDWH WROHUDQFHV WKDW ZHUH FUHDWHG HDUOLHU

Select the *HRPHWULFDO **icon, then select the top face of the part.** 7KH Geometrical Tolerance ZLQGRZ DSSHDUV

Change the symbol to 6WUDLJKWQHVV **with a value of 0.05 and select *OK*.** 7KH WROHUDQFH DSSHDUV

7R GHILQH WKH FRWUHUFWRO\HUDQFHUHG &$7,$ ZLOOHQRW DXWRPDWLFDOO\ PDQWDKH WRYLHZDQFHG\PDQ

Select the 9LHZ)URP 5HIHUHQFH **icon, then create a front view on the face that is shown below.** 7KH YLHZ LV FUHDWHG

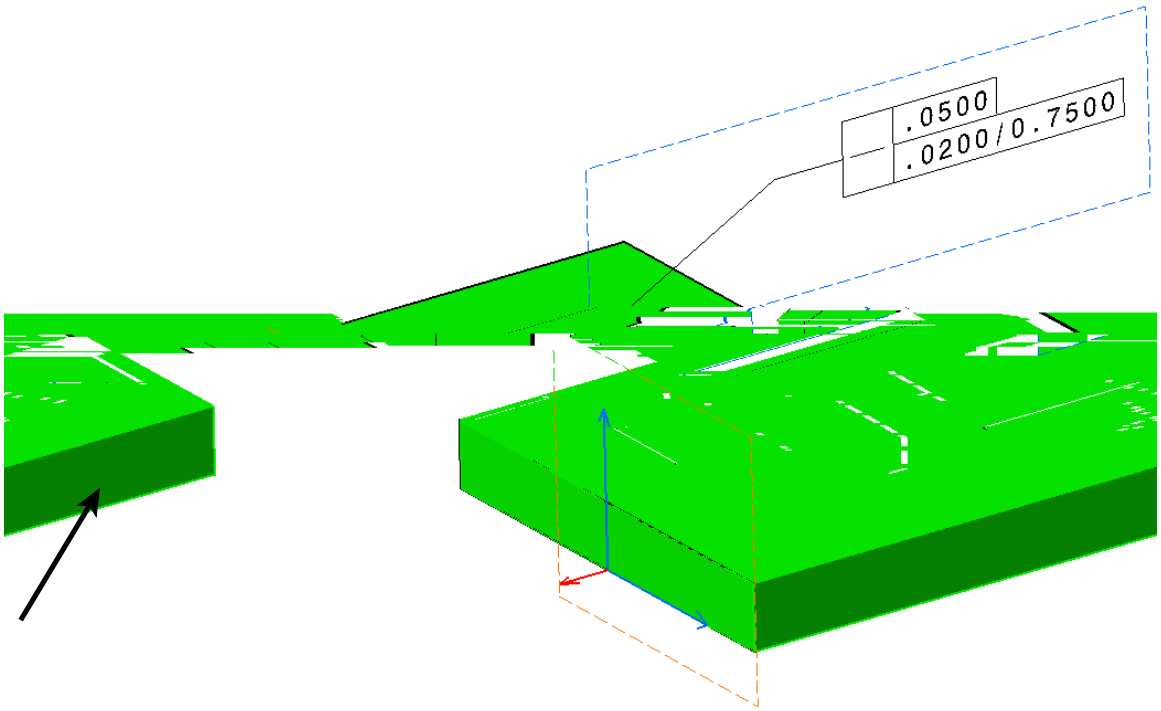

&LUFXODULW\

&LUFXODULW\ WORKRZ DQRXQG FDRQVXUGHFUHWPRXVPHHEWWQHRGH
UHTXLUHPHQWV

,I DSSOLHG WR DQ XDUVDFKHRUHQWNQRWDWKHWKDW DUH LQWH
SODQH QRUPDO WRXWKHDPLXWRIHRQWKHWDZQFWK]LRQWKHSHWFLIL
FRQFHQWULF FLUFOHWHWHDWQKHWDRHXH

,I DSSOLHG WRO DSRVLQKWUHFHDWKHDWXDWHGLQWHQ\ SODQH SI
WKURXJK WKH FHQWHUH SRXLQWWHRLWWKDZQWHKL]RQWHKVHSWRLILH
FRQFHQWULF FLUFOHWHWHDWQKHWDRHXH

Open the &LUFXODULW\ **document.**

Select the &LUFXODULW\ 6 FLIGEDWLRQ Geometrical Specification ZLQGRZ DSSHDUV

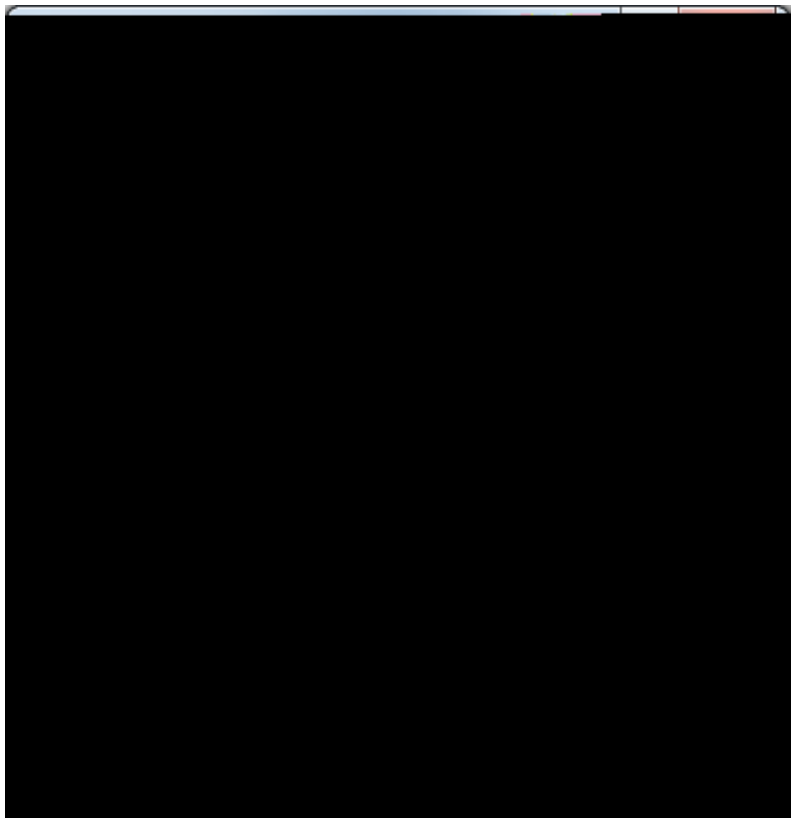

Change the *Numerical* value to 0.05 and select *OK*, then select *Close*. 7KH WROHUDQFH DSSHDUV 3RVLWLRQ LW DV VKRZQ EHORZ

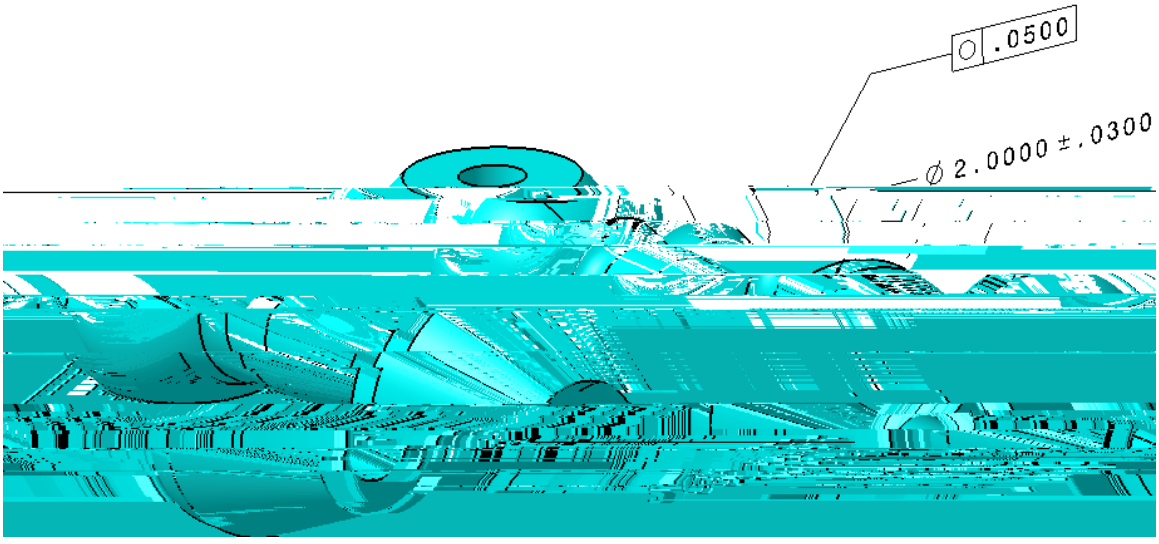

&OLFNLQJ DQG GUDJJLQJ DRQ WKH WHDWKU ZLQGRH QWDKHO LW LQ D FLUKFXODUXQSGWLKHLOXUIDRHWKKHRULQWDDLSKWQHVV

Select the surface shown below. 7KH FLUFXODU LQWR\WR DSSLRQ UGR7HKLV LV D OLPLWDWLRQ RI WKH 7RKHUDQFHQ FDQ LHRFUHUDWHG ZLWK *HRPHWULF 7ROHUDQFHLQ HLHRQ VLQWHUWDQWL

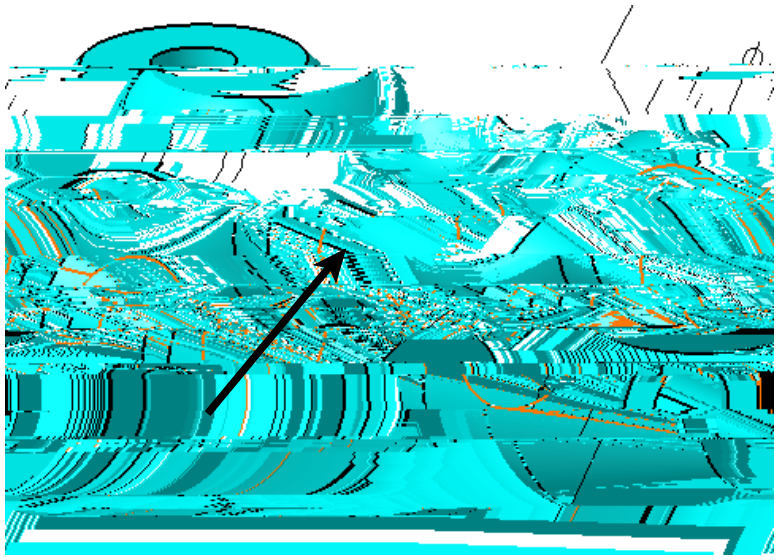

Select the spherical surface instead, then select the &LUFXODULW\ 6icon. SHFLILFDWLRQ

7KH Geometrical Specification ZLQGRZ DSSHDUV D &LUFXODULW\ 6FRO FLOOUSWDFHROH RQ WKH VSKHUH

Change the *Numerical* value to 0.03 and select *OK*, then select *Close*. 3RVLWLRQ WKH WROHUDQFHV DV VKRZQ

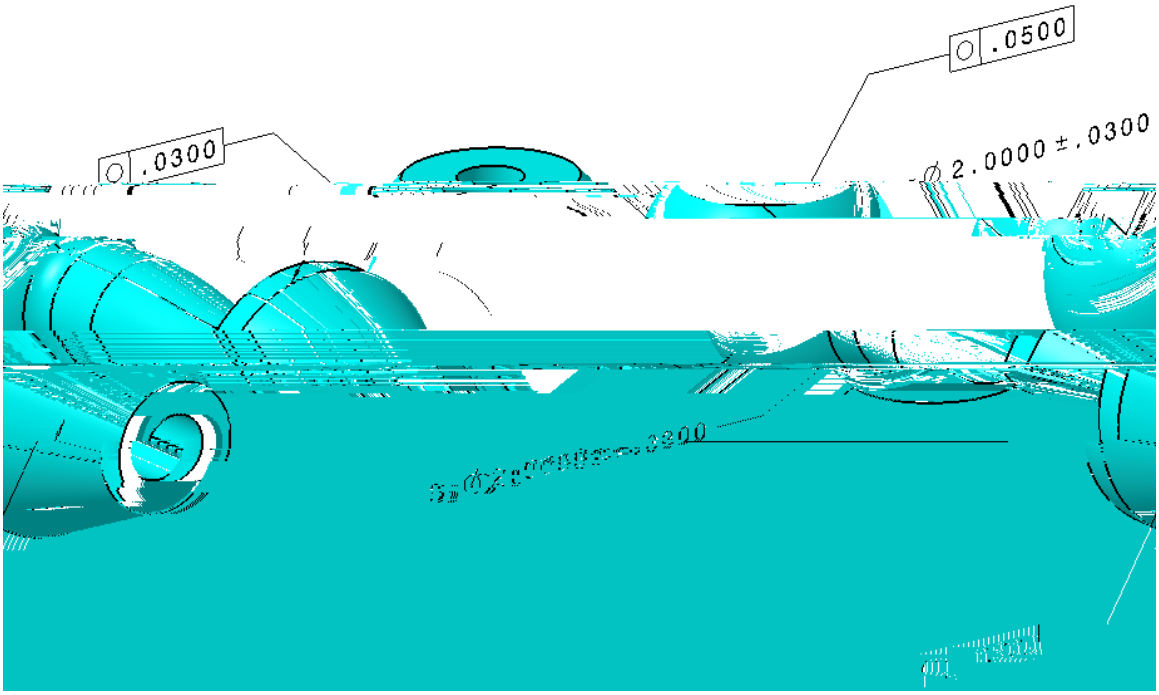

Save and close the document.

0DQXDOO\

1RZ \RX ZLOO FUHDWH WKH VDRH JHDQFHV PDQXDOO\

Open the &LUFXODULW\ **document, then select the** *HRPHWULFDO **icon.** 7RO UDQFH (QVXUH \RX RSHQ XPKHQ RUQJLQDO WKHRRQH QRXZ LDYHG DSSHQ DQ HOHPHQW LV VHOHFWHG

Select the cylindrical surface, then change the symbol to &LUFXODULW\

Enter <u>0.05</u> in the *Tolerance* field and select *OK*. 7KH WROHUDQFH DSSHDUV WKH RQH FUHDWHG DQWKH 7RO HUDQFH WKH $GYLVRU

Select the *HRPHWULFDO **icon again, then select the conical surface.** 7KH Geometrical Tolerance ZLQGRZ DSSHDUV

Change the symbol to &LUFXODULW\ **with a value of 0.03 and select *OK*.** 7KH WROHUDQFH DSSHDUV

Select the *HRPHWULFDO **icon, then select the surface shown below.** 7KH Geometrical Tolerance ZLQGRZ DSSHDUV

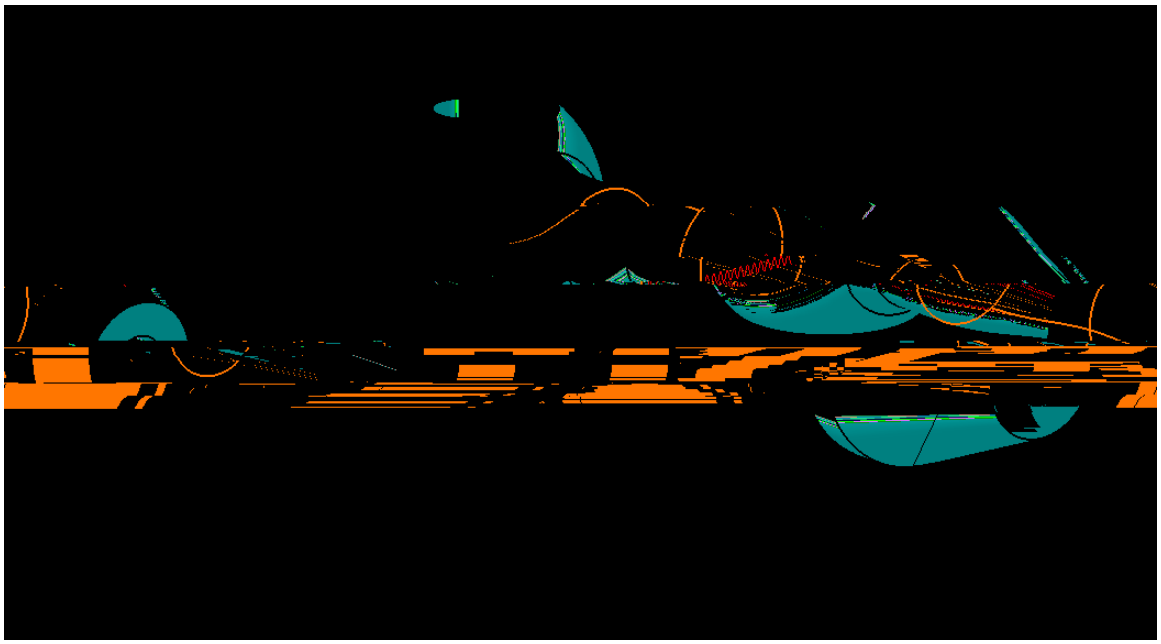

Change the symbol to &LUFXODU\W\ **with a value of 0.03 and select *OK*.** 7KH WROHUDQFH LV QRQ VLGP DQHDLVF HGWZ DLVFWLDP ,W DSSHDU WKH UHG VTXLJJO\ DQGHZEUQHGWHRPHWD ULFDO WROHUDQFH VSHFLILFDWLRQ WUHH

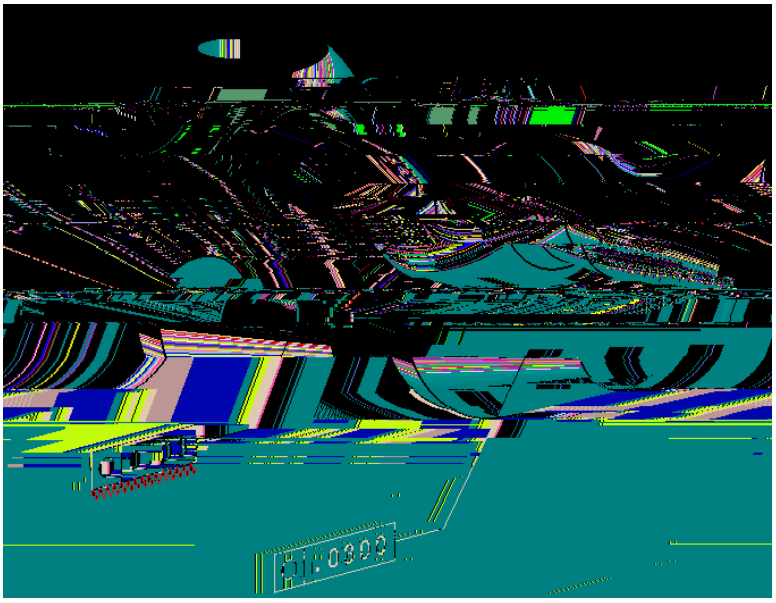

7KH YDOXH GLRG QRWDVGLWXVKRXOG KDRYH EHPFDQXWLFLW&RX FD IRUFH LW WR UHHGLFRJUWKHWHQDFWHYQWXH \RX ZDQW

Double-select on the new geometrical tolerance. 7KH Geometrical Tolerance ZLQGRZ DSSHDUV

Change the value to .0300 and select *OK*. 1RZ WKH YDOXH UHDGV SURSHUO\

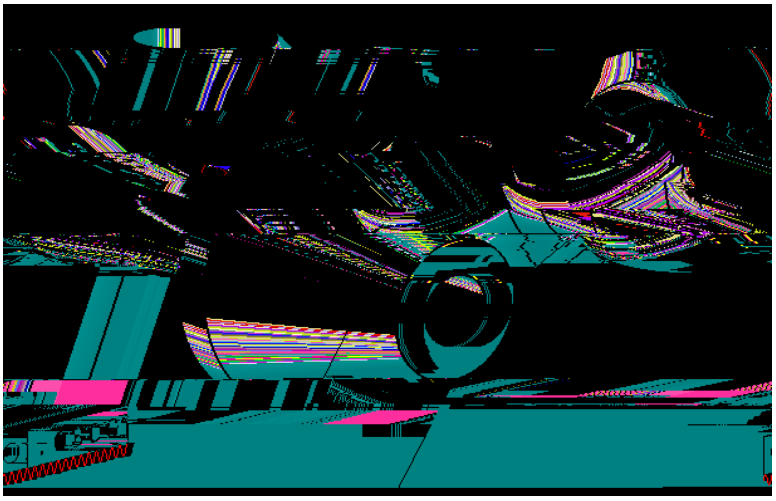

Select the *HRPHWULFDO **icon, then select the spherical surface.** 7KH Geometrical Tolerance ZLQGRZ DSSHDUV

Change the symbol to &LUFXODULW\ **with a value of 0.03 and select *OK*.** 3RVLWLRQ W WROHUDQFHV DV VKRZQ EHORZ

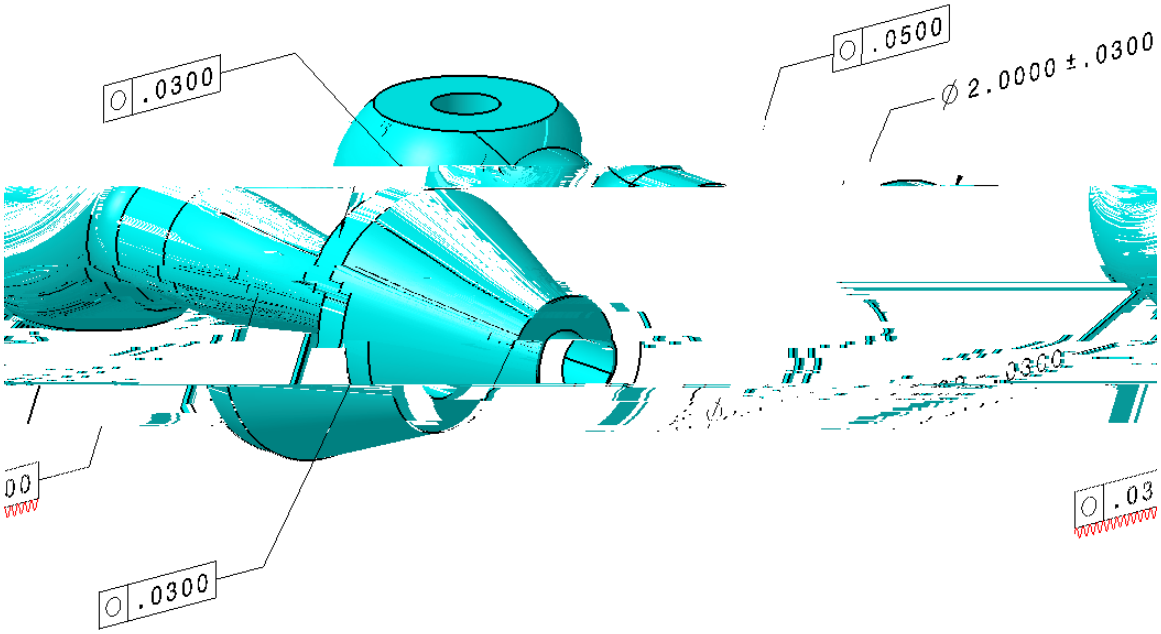

Close the document.